o-microGiGaCN™

4-Channel Optical Transceiver Module

Part Number:

Module: FPD-010R008-0E

Patch Cord: FOC-CC****

Description

Newly developed optical transceiver module, FUJITSU's o-microGiGaCN™ series supports electric to optical interface conversion and provides 3.125 Gbps x 4 channel, bi-directional data transfer. The Electrical interface is FUJITSU's industry standard high-speed differential copper connector, microGiGaCN™ that has been selected by InfiniBand™, 10G Fiber Channel, 10GBASE-CX-4, SAS, and sATA2.

The o-microGiGaCN™ module makes it possible to extend transmission length up to 300m (2.5Gbps) over fiber optic cable from Industry Standard 4 lane copper cable with Media Detection Circuitry (connector detect and power supply circuitry) on the customer's board/host side. The module provides flexibility, allowing the user to select interface options with the one low cost copper I/O connector on the board. The module provides a low cost solution for data center requirements.

Features

- **Converts 4x microGiGaCN™ to 4x optical interface**
- **Optical interface 12-channel MPO connector**
- **Up to 100m links with standard 50/125um MMF ribbon cable at 3.125 Gbps, and up to 300m at 2.5 Gbps**
- **Reliable, Low cost 850nm VCSEL technology**
- **0 to +70 degree C case temperature operating range**
- **Low power: 0.9 Watts Typical with 3.3V power supply supplied through connector**
- **Hot Pluggable electrical interface**
- **IEC Class 1M laser eye safty compliant**

Block Diagram

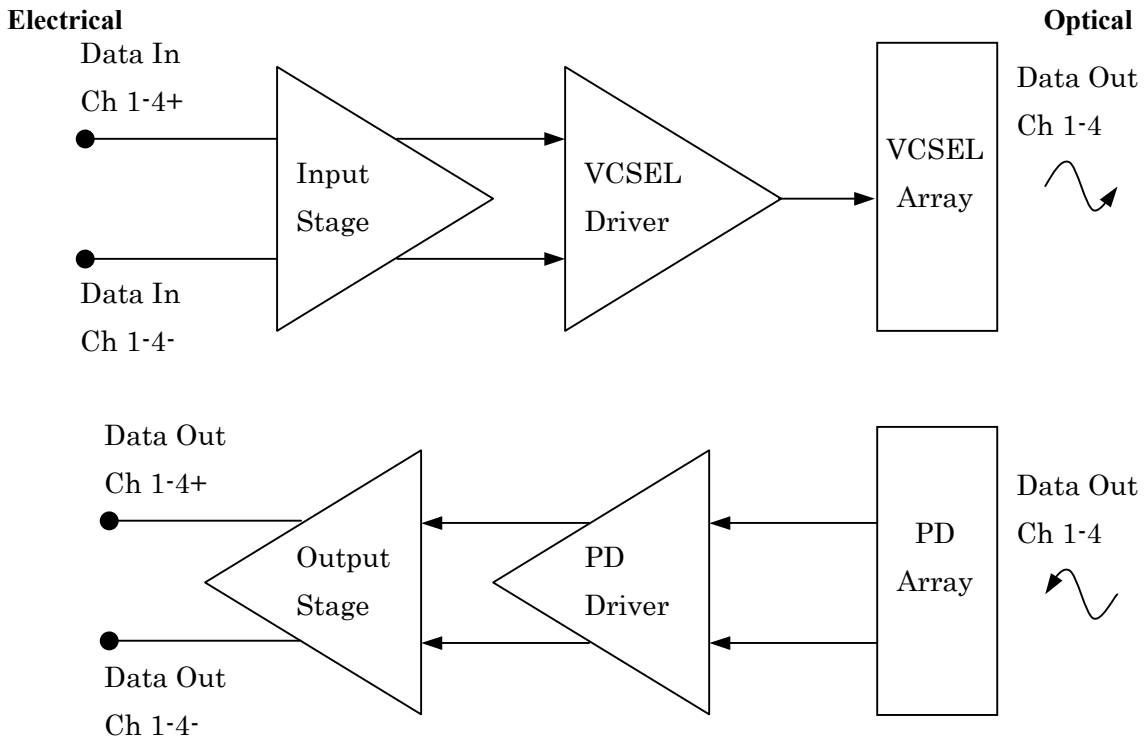

Figure 1: Functional Block Diagram

Absolute Maximum Rating

Stress beyond the values stated below may cause permanent damage to the device. Exposure to absolute maximum rating conditions for extended periods may affect device reliability.

Table 1 Absolute Maximum Rating

Parameter	Minimum	Maximum	Units	Notes
Storage Temperature	-20	+85	℃	
Relative Humidity	5	85	%	
Supply Voltage	3.14	3.47	V	

Recommended Operating Conditions

Table 2: Operating Conditions

Parameter	Minimum	Typical	Maximum	Units	Notes
Operating Case Temperature	0		+70	℃	
Supply Voltage : Vcc	3.14	3.3	3.47	V	
Power Dissipation		0.9		W	
Power Supply Noise			200	mV_{P-P}	1
Transmitter Differential Input Voltage	100		1600	mV_{P-P}	
Signaling Rate/Channel	0.5		3.1875	Gbps	2
Serial Data Input Termination		50		Ω	

Notes:

1. Transmitter Differential Input Voltage = (Vin+p-p) – (Vin-p-p)
2. Limits assume $PRBS2^{23}$-1. Signaling rates lower than indicated may be used with encoding schemes such as 8B/10B coding.

Electrical Characteristics

Table 3: Transmitter Electrical Characteristics

(Operating Temperature: +20℃ to +80℃, Power Supply: 3.14V to 3.47V)

Parameter	Minimum	Typical	Maximum	Units	Notes
Transmitter Differential Input Voltage	100		1600	mV_{P-P}	
ODISControl Voltage -HIGH	Vcc-1.3		Vcc	V	1
ODIS Control Voltage -LOW			0.8	V	1

Notes:

1. All VCSEL transmitters are enabled when this signal is HIGH.

Table 4: Receiver Electrical Characteristics

(Operating Temperature: +20℃ to +80℃, Power Supply: 3.14V to 3.47V)

Parameter	Minimum	Typical	Maximum	Units	Notes
Differential Peak-to-Peak Output Voltage Swing	450		800	mV	1
Data Output Rise Time	60		150	ps	2
Data Output Fall Time	60		150	ps	2
Contributed Deterministic Jitter			54	ps	
Contributed Total Jitter			112	ps	

Notes:

1. Outputs are compatible with 10K, 10KH, 100K ECL and PECL inputs.
2. Electrical rise/fall time is measured at 20% and 80% of the receiver's serial digital output.

Optical Characteristics

Table 5: Transmitter Optical Characteristics

(Operating Temperature: +20℃ to +80℃, Power Supply: 3.14V to 3.47V)

Parameter	Minimum	Typical	Maximum	Units	Notes
Output Optical Power			-2.0	dBm avg.	1
Optical Modulation Amplitude	0.19			mW	2
Wavelength	830	850	860	nm	
Spectral Width –rms			0.85	nm	
Data Output Rise/Fall Time			130	ps	3
Inter-channel Skew	0		100	ps	
Relative Intensity Noise (OMA)			-120	dB/Hz	
Contributed Deterministic Jitter			40	ps	
Contributed Total Jitter			100	ps	4

Notes:

1. Optical power measured at the end of 1m 50/125 μm fiber with Numerical Aperture = 0.2. The specified optical output power will be compliant with IEC 60825-1 A2, class 1M Accessible Emission Limits.
2. Optical Modulation Amplitude (OMA) is provided to specify link performance. OMA can be related to average power and extinction ratio using the graph in Figure 1. The minimum ER emitted by the transmitter is 4 dB.
3. These are unfiltered 20-80% values.
4. Total contributed jitter (TJ) is given assuming detected bit-error ratio equal to 10^{-12}.

Table 6: Receiver Optical Characteristics

(Operating Temperature: +20℃ to +80℃, Power Supply: 3.14V to 3.47V)

Parameter	Minimum	Typical	Maximum	Units	Notes
Input Optical Power			-2.0	dBm avg.	1
Wavelength	830	850	860	nm	
Return Loss	12			dB	2
Signal Detect Asserted			-17	dBm avg.	
Signal Detect De-asserted	-30			dBm avg.	
Unstressed Receiver OMA			-13	dBm	3
Stressed Receiver OMA			-10	dBm	4

Notes:

1. Measurement using 1m optical loopback between optical transmitter and receiver.
2. Return loss is defined as the minimum attenuation (dB) of received optical power for energy reflected back into the optical fiber.
3. Unstressed receiver OMA is the largest optical modulation an ideal signal with no shape or noise penalties has to have at the input of the receiver in order to produce detection with bit-error ratio of at most 1.0E-12.
4. Calculated assuming a compliance signal that exhibits 1 dB vertical eye closure penalty, peak-to-peak source deterministic jitter DJ=60ps, and duty-cycle distortion component of deterministic jitter equal to DCD=22ps, no amplitude noise and no random jitter. Stressed receiver OMA is the optical modulation amplitude of the compliance signal at the input to the receiver that results in data detection with bit-error ratio better than 10^{-12}.

Laser Eye Safety

The transceiver module comply with Laser Product Class 1M laser eye safety requirements per IEC/RN 60825-1 Amendment 2: 2001.

LED Indicator

LED indicator as following table 7.

Table 7: LED Indicator

LED light up	Status
Not light up	The power is not supplied.
Green light up	Power on and the connector is working.
Green and Red light up	The connector is not working. (Link error.)

Link Overview

Optical link carries a duple 4x link as shown in Figure 2.

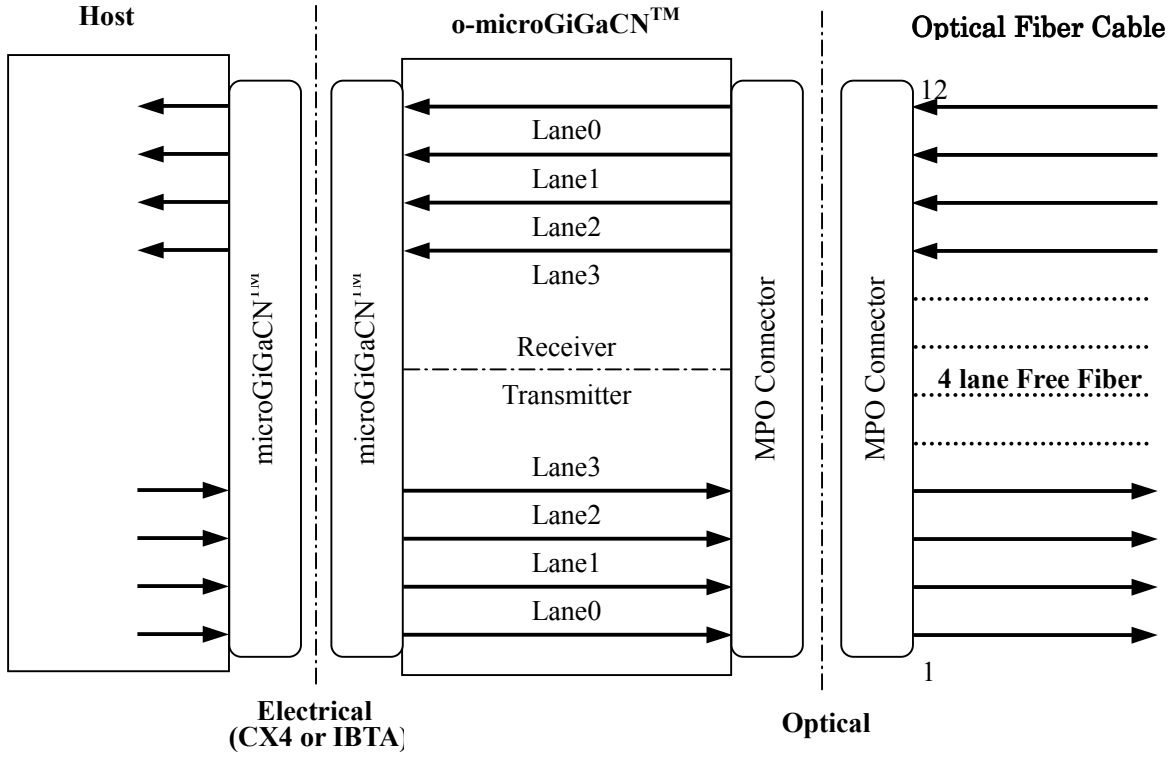

Figure 2: o-microGiGaCN™ Link Overview

Link Distance

The following table 8 lists the reach distance of the o-microGiGaCN™ for different multi-mode (MMF) types and bandwidths. Each case includes a maximum of 2 dB per channel connection loss for path cables.

Table 8: Link distance

Data rate ＼ MMF type	62.5/125 μm 150MHz.km	50/125 μm 500MHz.km	50/125 μm 2000MHz.km
2.5 Gbps / channel	100m	300m	500m
3.125 Gbps / channel	50m	100m	300m

Optical Fiber Cable Specification

The following table 9 the optical fiber cable specification for o-microGiGaCN™.

Table 9: Optical fiber cable specification

Item	Value	Note
Connector type	MPO/MTP	
Polishing	Flat Polishing	
Polarity	Without pin	
Channel	12 channels	
Fiber Type	Multi Mode, 50/125 μ m, GI, Ribbon type	
Insertion Loss	1.0dB max	
Transmission Band	500MHz*km or 2000MHz*km	

Link Performance

The link distance in table 7 shall be achieved with the following table 10.

Table 10: Link performance

Parameter	Value	Unit
Bit Error Rate (BER)	$< 10^{-12}$	Bit

Supply Power to the o-microGiGaCN™

The microGiGaCN™ usually does not provide power for the module. The draft proposal of FC-PI-2 allows the re-assignment of some ground pins as power pins, as shown in the following table 11.

This re-assignment does not affect the function or performance of standard cable connection for InfiniBand™ and 10GBASE-CX4 applications, as the power is added only when the system is sure the attached module is "active". The re-assigned pins are all AC ground to minimize the effect on high-speed signal integrity.

Table 11: Pin assignment in FC-PI-2

Connector Pin Number	Alternate Signal Definitions
G1	Signal Ground
G2	ODIS
G3	Signal Ground
G4	Signal Ground
G5	Signal Ground
G6	Fault-
G7	Type_Sense
G8	Vcc
G9	Signal Ground
S1	RX0+
S2	RX0-
S3	RX1+
S4	RX1-
S5	RX2+
S6	RX2-
S7	RX3+
S8	RX3-
S9	TX3-
S10	TX3+
S11	TX2-
S12	TX2+
S13	TX1-
S14	TX1+
S15	TX0-
S16	TX0+
Housing	Chassis Ground

FUJITSU COMPONENT recommends the following Figure 3 on customer's board to perform the media detect function. The circuitry uses less than 1/4 square inch of board space on a single layer, and use less than 1mA of current.

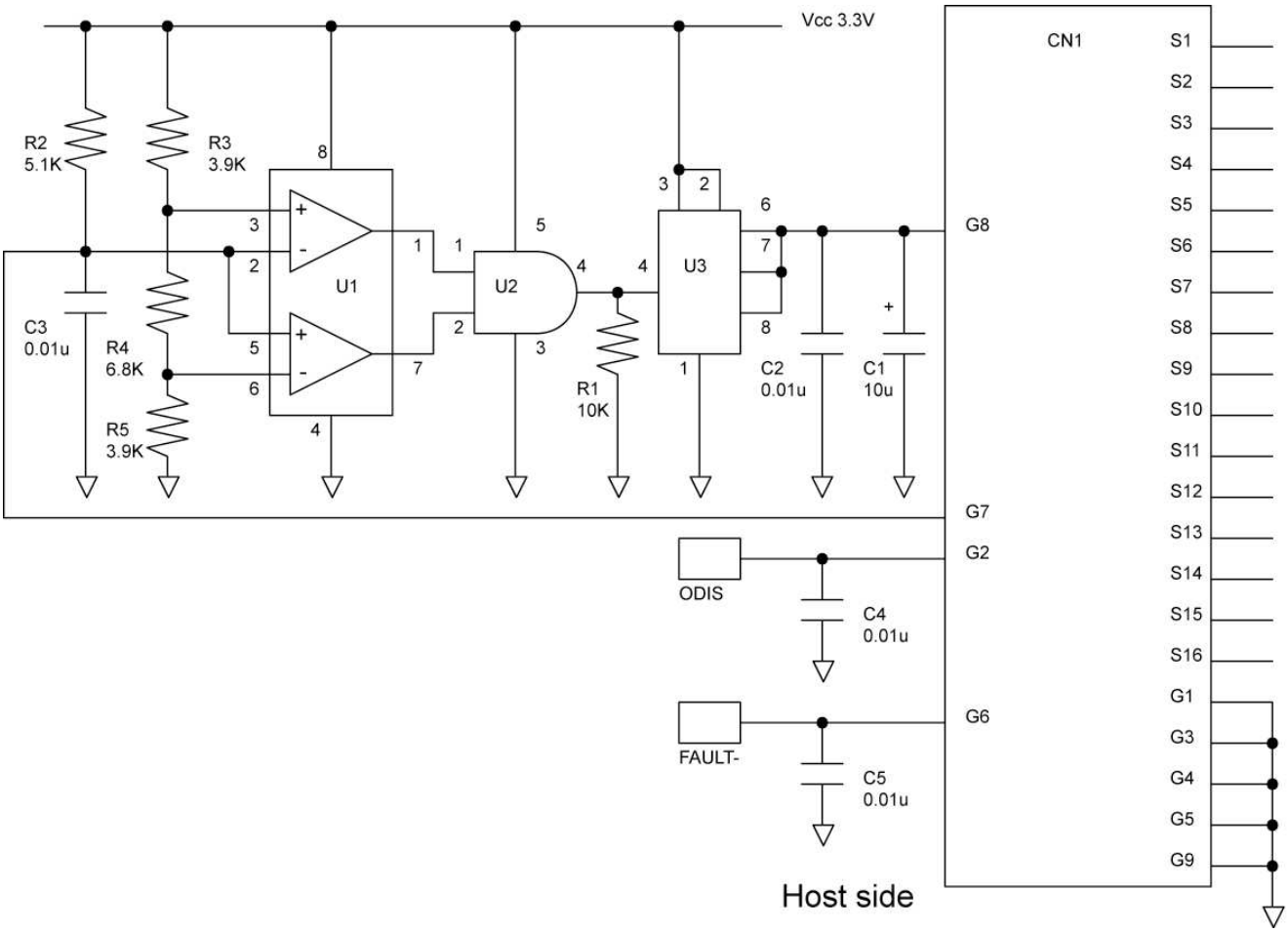

Figure 3: Recommended MDC

ODIS (Optics Disable) -Input-: Disable the optics when this signal is pull HIGH. Enables the optics when this signal is pull LOW. If it is tied to GND then the optical transmitter is default on when power is applied.

FAULT- (TX_Fault Indicator) –Open Drain Output-: It is default high, and will turn low when there is a fault. Shorting this pin to ground will not affect the performance of the module.

The recommended parts are listed in the following table 12.

Table 12: Recommended parts of MDC

Item	Designator	Description	Q'ty	Maker	Part number
1	U1	Dual push-pull output comparator	1	Maxim	MAX9032AKA
2	R2	5.1K 0402 resistor	1		
3	R1	10K 0402 resistor	1		
4	R3, R5	3.9K 0402 resistor	2		
5	R4	6.8K 0402 resistor	1		
6	C3, C4, C5	0.01 uF ceramic 0402 capacitor	3		
7	U2	Single 2-Input Positive-AND Gate	1	TI	SN74AHC1G08DCKR
8	U3	Power Distribution Switch	1	TI	TPS2031D
9	C2	0.1 uF ceramic 0402	1		
10	C1	10 uF Tantulam Case B capacitor	1		
11	CN1	microGiGaCN™	1	Fujitsu	

Product Family

Module

Part Numbers	Description
FPD-010R008-0E	8pear microGiGaCN™ and 12-channel MPO/MTP connector support

Mechanical design of o-microGiGaCN™ is shown as following Figure 4.

It is preliminary design and subject to change without notice, please check with us for the latest design.

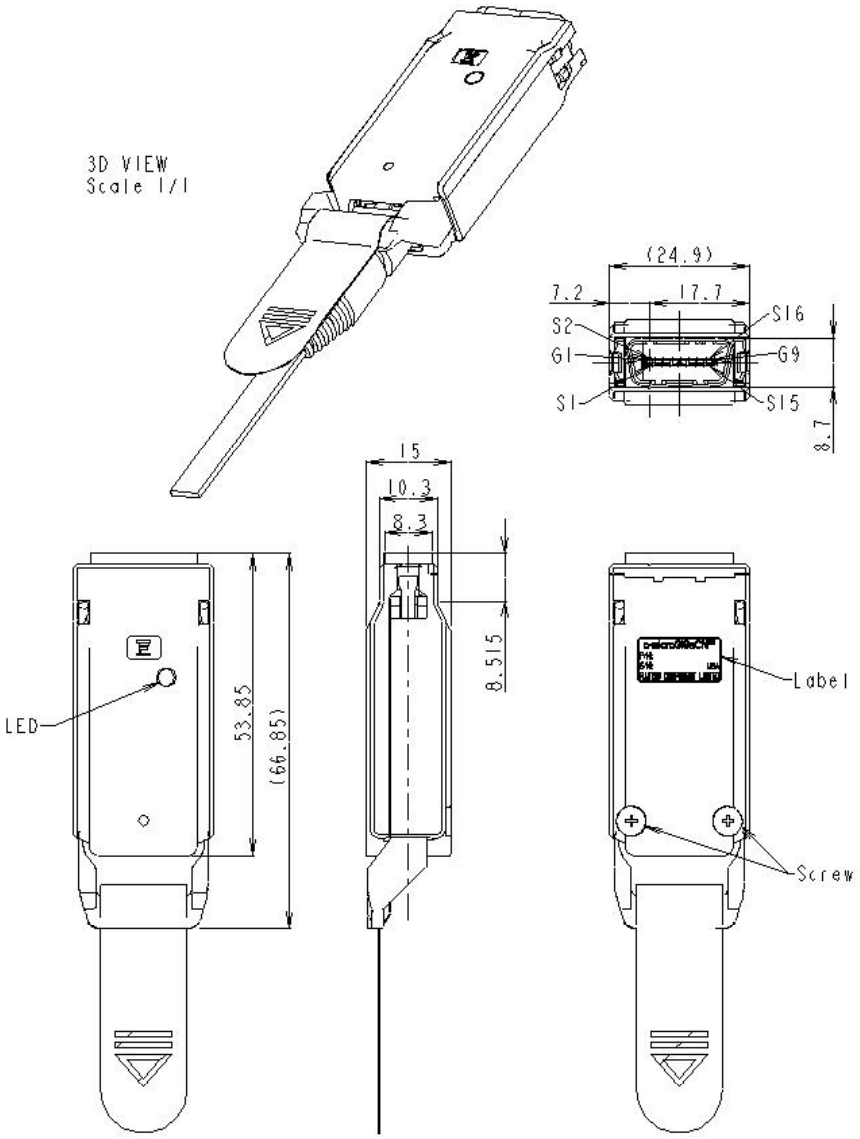

Figure 4: o-microGiGaCN™ schematic drawing

Patch cord

Part Numbers	Description
FOC-CC1****	12-chanel MPO fiber optic patch cord - MMF 50/125um 500MHz/km, Ruggedized type of Patch cord, without Guide pin

Part Numbers	Standard Length
FOC-CC10001	1m
FOC-CC10002	3m
FOC-CC10003	5m
FOC-CC10004	10m
FOC-CC10005	15m
FOC-CC10006	20m
FOC-CC10007	30m
FOC-CC10008	40m
FOC-CC10009	50m
FOC-CC10010	70m
FOC-CC10011	100m
FOC-CC10012	150m
FOC-CC10013	200m
FOC-CC10014	300m

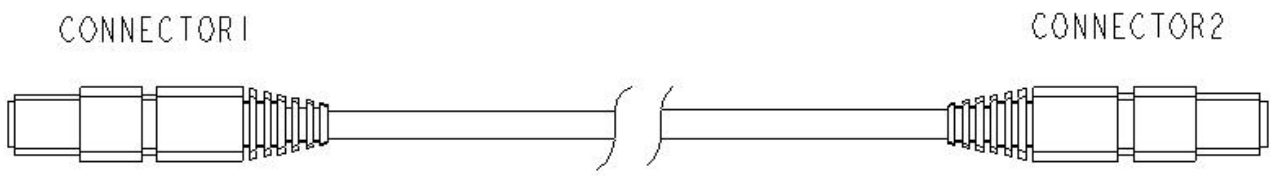

Figure 4: Patch cord schematic drawing

Revision	Date	Changes
Rev 0.0	May 5, 2004	Document creation.
Rev 1.0	July 23, 2004	Revised all pages.
Rev 2.0	Dec 27, 2004	Revised all pages.
Rev 3.0	Jan 12, 2005	Revised all pages.
Rev 4.0	Mar 2, 2005	Revised 1, 11 page. Part number change.
Rev 4.1	Apr 28, 2005	Revised 1 page. Figure.
Rev4.2	Jun 22, 2005	Revised 7 page. Addition optica fiber specification.